sunlite®

INSTALLATION INSTRUCTIONS

LED LINEAR HIGH BAY FIXTURE | 8528n-SU, 8528o-SU, 8528s -SU

CERTIFIED

DIMMABLE

Compatible with most wall based 0-10V dimming controllers

Please read and understand this entire manual before attempting to assemble, operate or install the product.

WARNINGS & CAUTIONS: [illegible]

This device complies with part 15 of the FCC Rules. Operation is subject to the following two conditions: (1) this device may not cause harmful interference, and (2) this device must accept any interference received, including that may cause undesired operation.

[illegible]

(Cable Installation, Surface Mounting and 3/4" NPT installation are optional, hardware not included.)

Retain these instructions for future reference.

V2022a

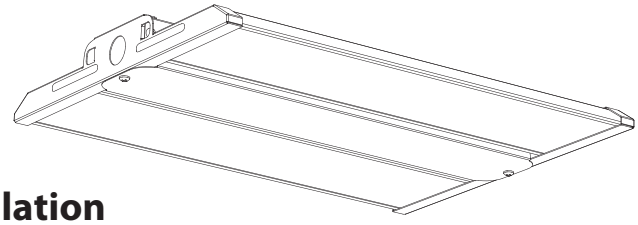

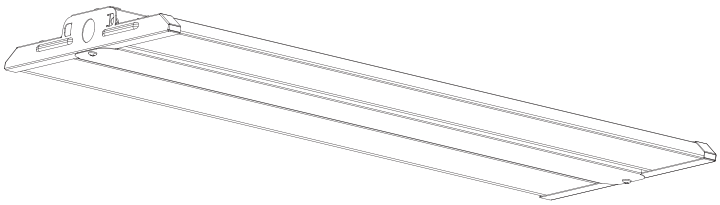

Installation

This Fixture can be installed using a Chain/Cable Kit (Fig 1), Pendant Mount (Fig 2) or Surface Mount (Fig 3). After Installing fixture, install the wireguard (Fig 4) by securing it to the sides of the high-bay. Motion Sensor & PIR sensor are optional (Fig. 5)

Fig. 1

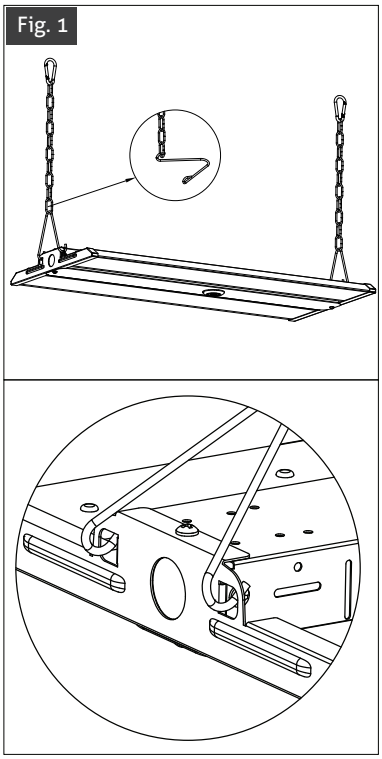

Fig. 2

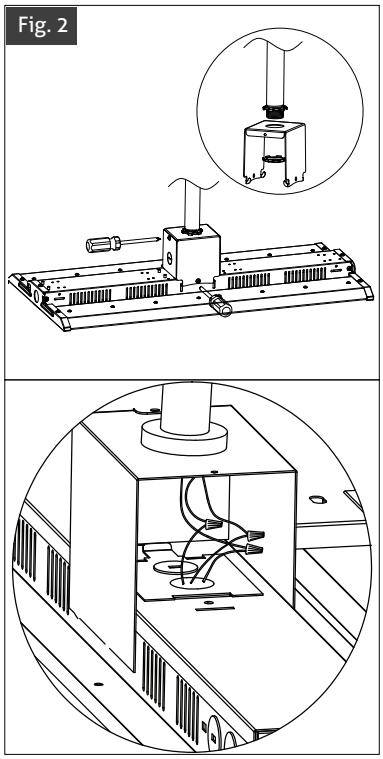

Fig. 3

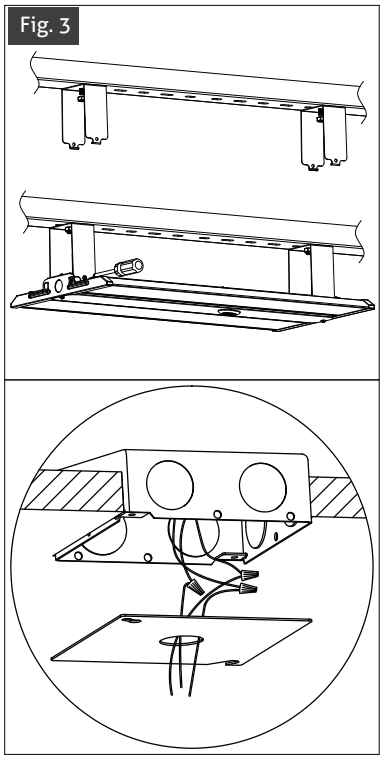

Fig. 4

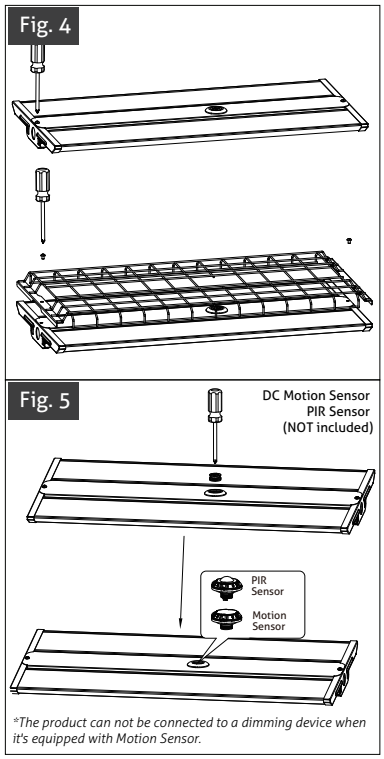

Fig. 5

**The product can not be connected to a dimming device when it's equipped with Motion Sensor.*

WIRING INSTRUCTION OF MAIN CABLE:

Black (or brown) line — Connect Live Wire

White (or blue) line — Connect Neutral Wire

Green (or yellow-green) line — Connect Earth Wire

Yellow - Vaux (12V)

Purple - Dim +

Pink - Dim -

0(1)-10V Dimmer (0-10V Dimming Wiring)

Sunshine Lighting Company 744 Clinton Street Brooklyn, NY 11231, USA • **T.** 718.768.7000 • **F.** 718.768.0970 • www.sunlite.com