VANITY LIGHT
INSTALLATION INSTRUCTIONS

Please read carefully and save these instructions, as you may need them at a later date.

CAUTION

Turn off the main power at the circuit breaker before installing the fixture, in order to prevent possible shock.

GENERAL

All electrical connections must be in accordance with local and National Electrical Code (N.E.C.) standards. If you are unfamiliar with proper electrical wiring connections obtain the services of a qualified electrician.
Carefully unpack light fixture and hardware bag from box, and make sure that no parts are missing by referencing the illustrations on the installation instructions.

INSTALLATION & ASSEMBLY

Remove the fixture and the mounting package from the box and make sure that no parts are missing by referencing the illustrations on the installation instructions.

1. Place the wall plate (3) over the outlet box and align the mounting slots of the wall plate (3) with the mounting holes of the outlet box. Use a level to make sure the wall plate (3) is straight., Mark the location of the keyhole slots of the wall plate onto the wall. Remove the wall plate (3) from the wall , Drill a 1/4 in. hole at the narrow end of each keyhole slot marking on the wall. Carefully hammer a wall anchor into each drilled hole.Replace the wall plate (3) over the outlet box and align the narrow end of each keyhole slot with its respective wall anchor . Feed the anchor screws (9) though the keyhole slots and thread them into the wall anchors until the wall plate (3) is flush against the wall. Feed the mounting screws through the mounting slots of the wall plate (3) and into the mounting holes of the outlet box.Feed the mounting screws through the mounting slots of the wall plate (3) and into the mounting holes of the outlet box.
2. Pull the power supply wires out from the outlet box(1). Attach the mounting bracket (3) to the outlet box with two outlet box screws. The side of the mounting bracket marked "GND" must face out.
3. Make wire connections, connect the black supply wire (5) to black fixture wire (11), white supply wire (4) to white fixture wire(10).
   Connect the fixture ground wire(12) to supply ground wire(6) with wire nut (7). Wrap all wire connections with electrical tape for secure connection.
4. Connect the fixture ground wire (11) to the supply ground wire (4) together using wire nut (7). Wrap all wire connections with electrical tape to ensure secure connection.
5. After wires are connected, tuck them carefully inside the outlet box. Place the fixture back plate(13) over the outlet box and feed fixture screws (8) through two holes of the fixture back plate until they protrude out from the back plate approximately 1/4" and secure with two cap nuts(14).
6. Slide the glass shade(15) over socket onto the socket cups, secure the glass shades to socket cups by threading the retaining ring(16).
7. Install light bulb (NOT included) carefully by using a handle tool (17).
   Installation complete, restore power at the circuit breaker and turn light switch on to activate this fixture.

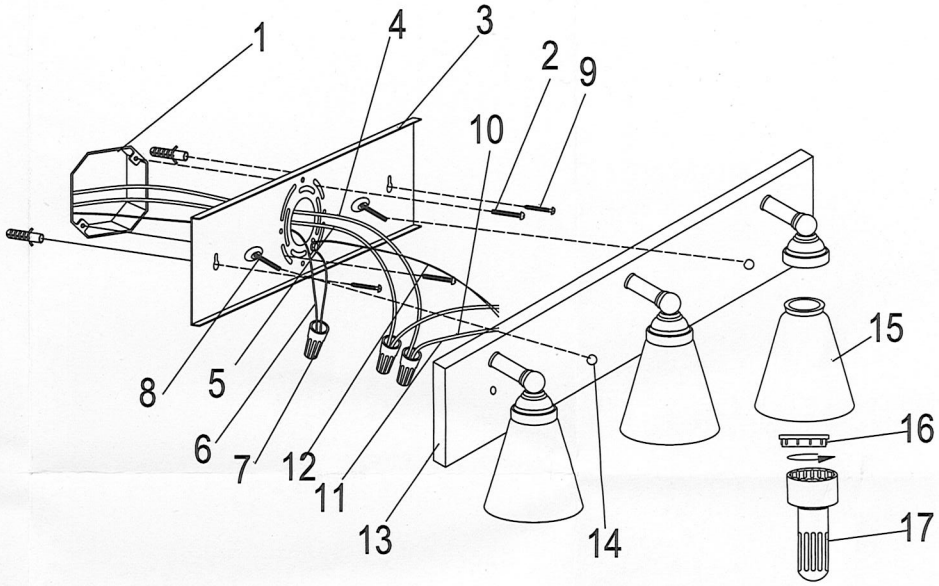

1. OUTLET BOX (NOT INCLUDED)
2. MOUNTING SCREW
3. MOUNTING BRACKET
4. WHITE SUPPLY WIRE
5. BLACK SUPPLY WIRE
6. SUPPLY GROUND WIRE
7. WIRE NUT
8. #8-32 FIXTURE SCREW
9. ANCHOR SCREW
10. WHITE FIXTURE WIRE
11. BLACK FIXTURE WIRE
12. FIXTURE GROUND WIRE
13. BACK PLATE
14. CAP NUT
15. GLASS shade
16. RETAINING RING
17. HANDLE TOOL